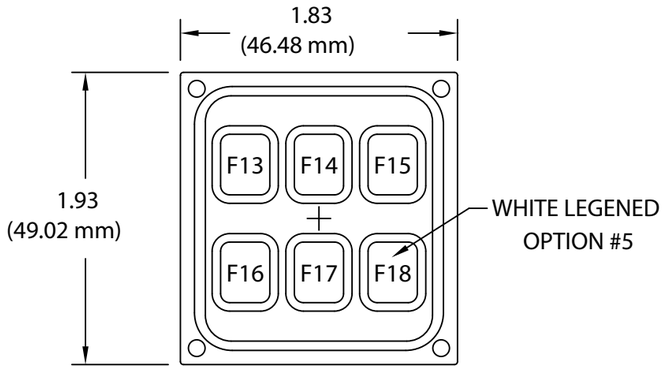

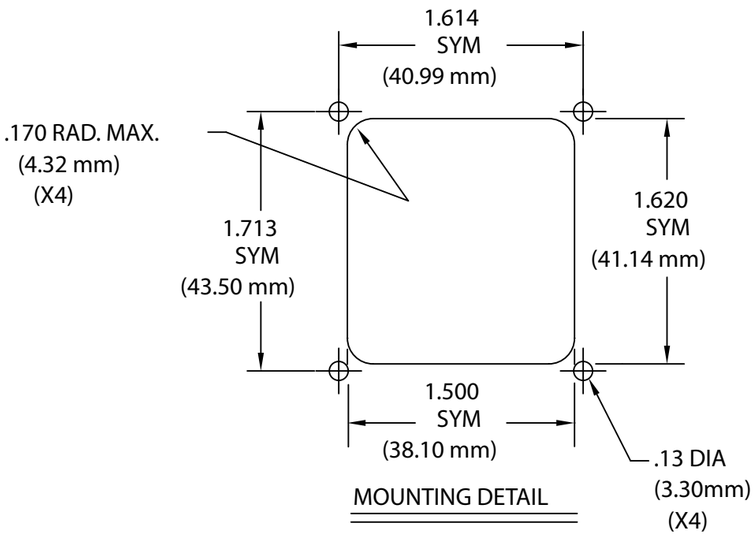

MOUNTING DETAIL

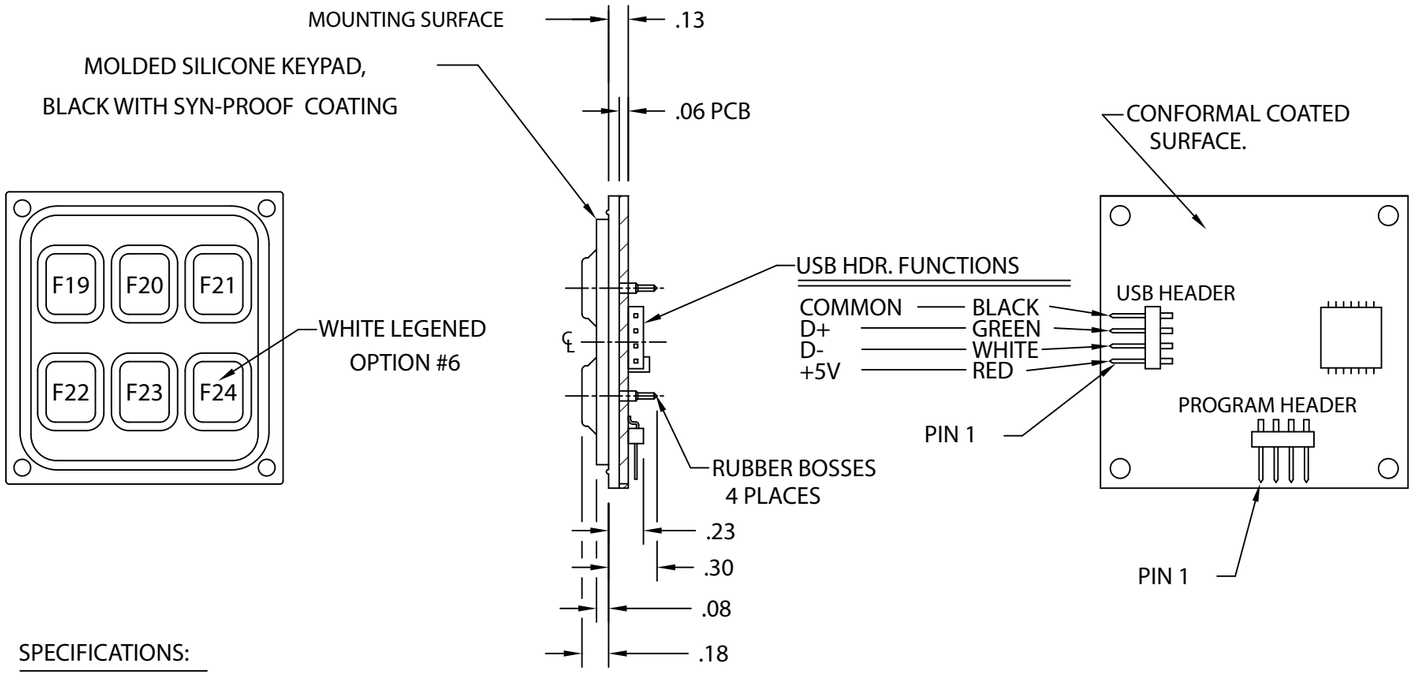

SPECIFICATIONS:

TEMPERATURE RANGE:	-40°C TO +80°C
SEALING RATING:	NEMA 4 (IP66), PCB HAS CONFORMAL COATING
SHOCK:	50G 11 MSEC. PER MIL-STD-810
WEIGHT:	ASSEMBLY, LESS CABLE, APPROX. 0.6 0Z. (18 GRAMS)
STANDARDS:	CE, ROHS AND FCC CLASS B COMPLIANT
POWER:	10mA @ 5V TYPICAL NON-BACKLIT

NOTES:

1. ALL KEY SWITCHES HAVE HARD GOLD PLATED CONTACTS, RATED UP TO 10MM ACTIVATIONS.
2. OUTPUT CONNECTOR HAS GOLD PLATED .025" SQUARE PINS ON 0.1" CENTERS
3. THIS PRODUCT CONTAINS STATIC SENSITIVE COMPONENTS.

ORDERING INFORMATION:

K P 6 0 U □ - [ ] - [ ].[ ]

- U — USB INTERFACE
- □ — 5 LEGEND OPTION F13 . . F18; 6 LEGEND OPTION F19 . . F24
- [ ].[ ] — OPTIONAL CABLE LENGTH DIMENSION. MINIMUM LENGTH IS 1.0 FT, MAXIMUM LENGTH IS 9.5 FT. IN 0.5 FOOT INCREMENTS. BLANK INDICATES NO CABLE.
- [ ] — BR BACKLIT RED; BG BACKLIT GREEN; BLANK NON BACKLIT

CTI ELECTRONICS CORPORATION

WWW.CTIELECTRONICS.COM

NEMA 4 (IP66) OEM INDUSTRIAL
6 BUTTON USB KEYPAD
KP60UX SERIES

761832

DATE 12-10-14

DRAWN BY PSB

APPROVED

SHEET 1 OF 1

COPYRIGHT CTI ELECTRONICS CORP. 2014
SPECIFICATIONS SUBJECT TO CHANGE WITHOUT NOTICE