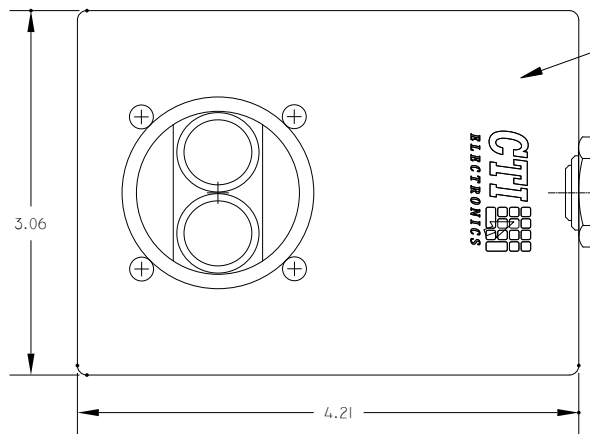

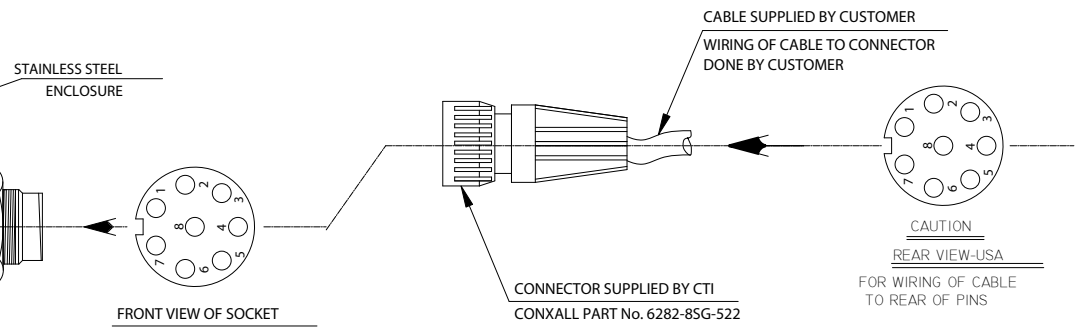

JOYSTICK ADDITIONAL FEATURES OPTION

[ ] BLANK INDICATES NO OPTIONS TO JOYSTICK

ORDERING INFORMATION:

M2000 [ ] - N [ ] - K [ ]

OPTIONS (VOLTAGE INPUT/OUTPUT)

KNOB OPTIONS (SEE PAGE 2 OF 2)

JOYSTICK OPTIONS	
G	MAXIMUM COMPRESSION SPRING
Z	CONFORMAL COATING ON PCB
RF	CONDUCTIVE BOOT AND FERRITE BEAD
D	LOW TEMPERATURE RANGE (-40°C TO +80°C)
N	NEUTRAL SWITCH (AVAILABLE ON +5V MODELS ONLY)

	INPUT	V REF @ CENTER POSITION	OUTPUT
0	+12V	+6V	+3V TO +9V
2	±5V	0V	±5V
3	±12V	0V	±10V
4	+5V	+2.5V	+0.5V TO +4.5V
5	+5V	+2.5V	+0V TO +5V
6	±10V	0V	±10V
7	±10V	+5V	+1V TO +9V

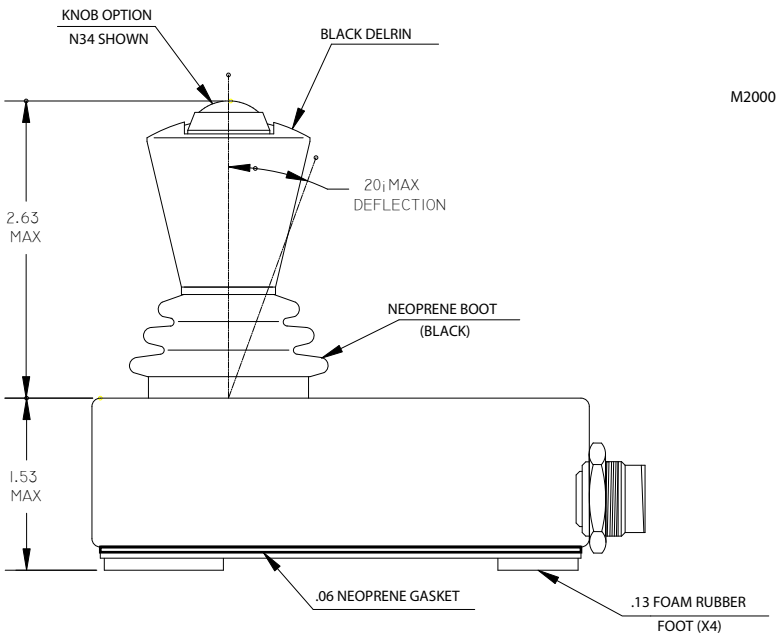

CTI	ELECTRONICS CORPORATION 110 OLD SOUTH AVE,STRATFORD,CT 06615 WWW.CTIELECTRONICS.COM	
	NEMA 4X(IP66) HAND HELD ANALOG JOYSTICK M2000- NX SERIES	
B 761797	SHEET 1 OF 2	REV. A
APPROVED	DATE 02-03-10	DRAWN PSB

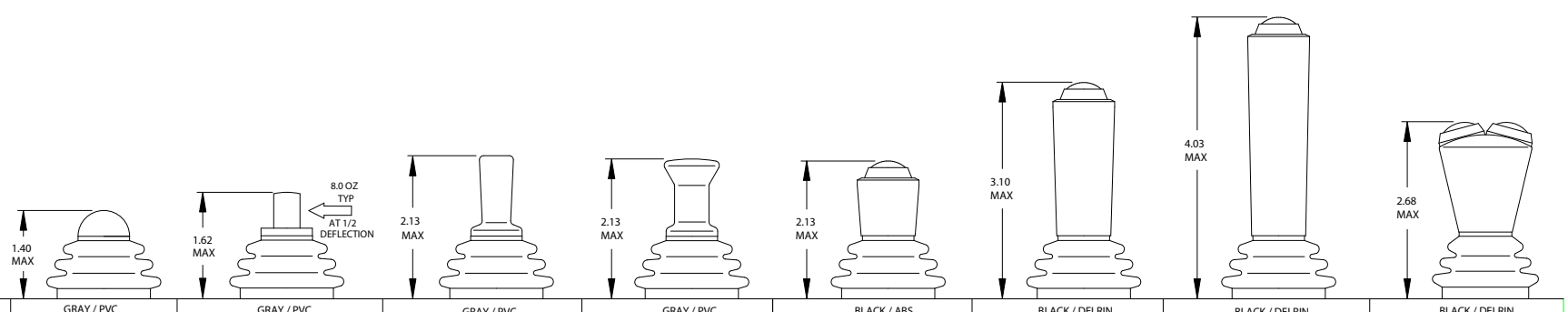

COLOR & MATERIAL	GRAY / PVC	GRAY / PVC	GRAY / PVC	GRAY / PVC	BLACK / ABS	BLACK / DELRIN	BLACK / DELRIN	BLACK / DELRIN
KNOB OPTION #	N5	N2	N24	N54	N3	N33	N63	N34

NOTE: REFERENCE INDIVIDUAL JOYSTICK SPECIFICATION DRAWINGS
FOR ADDITIONAL INFORMATION

PIN-OUT GUIDE

KNOB OPTIONS	N5 N2 N24 N54	N3 N33 N63	N34	N5 N2 N24 N54 N3 N33 N63 N34				
VOLTAGE OPTIONS	K4 K5	K4 K5	K4 K5	K7	K0	K2	K6	K3
PIN								
1	+5V	+5V	+5V	+10V	+12V	+5V	+10V	+12V
2	COMMON	COMMON	COMMON	COMMON	COMMON	-5V	-10V	-12V
3	X OUT	X OUT	X OUT	X OUT	X OUT	X OUT	X OUT	X OUT
4	V REF	V REF	V REF	V REF	V REF	COMMON	COMMON	COMMON
5	Y OUT	Y OUT	Y OUT	Y OUT	Y OUT	Y OUT	Y OUT	Y OUT
6	----	PUSH BUTTON	LEFT PUSH BUTTON	OPTIONAL PUSH BUTTON SWITCH				
7	OPTIONAL NEUTRAL SWITCH	OPTIONAL NEUTRAL SWITCH	RIGHT PUSH BUTTON	RIGHT PUSH BUTTON SWITCH N34 ONLY				
8	SHIELD	SHIELD	SHIELD	SHIELD				

CTI	ELECTRONICS CORPORATION 110 OLD SOUTH AVE,STRATFORD,CT 06615 WWW.CTIELECTRONICS.COM	
	NEMA 4X(IP66) HAND HELD ANALOG JOYSTICK M2000- NX SERIES	
B 761797	SHEET 2 OF 2	REV. A
APPROVED	DATE 02-03-10	DRAWN PSB