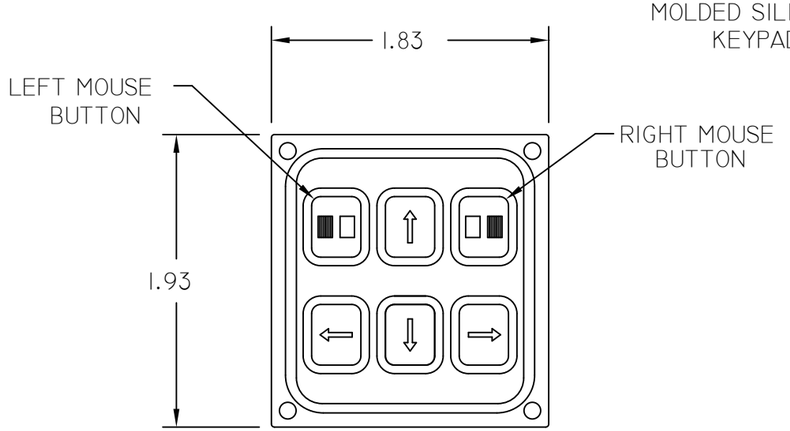

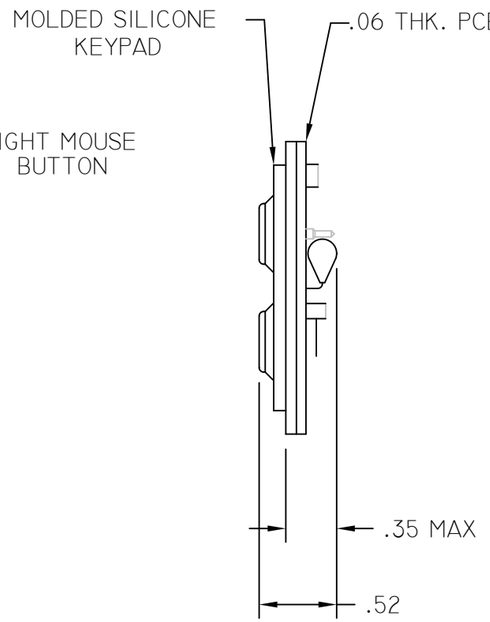

USB FUNCTIONS

COMMON	BLACK
D+	GREEN
D-	WHITE
+5V	RED

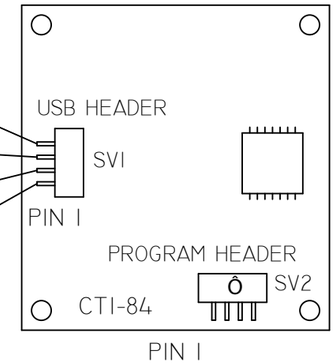

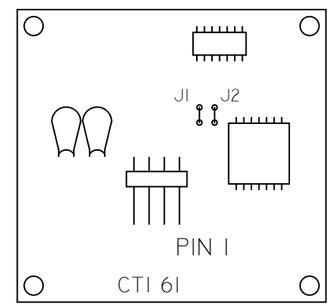

JUMPER FUNCTION (PS/2 ONLY)

JUMPER J2 IS REQUIRED FOR BACKLIT MODELS.

PS/2 HEADER OUTPUT

PIN NO.	FUNCTION	"CTI" COLORS
1	CLOCK	YELLOW
2	DATA	BLACK
3	+5 VOLTS	RED
4	COMMON	GREEN

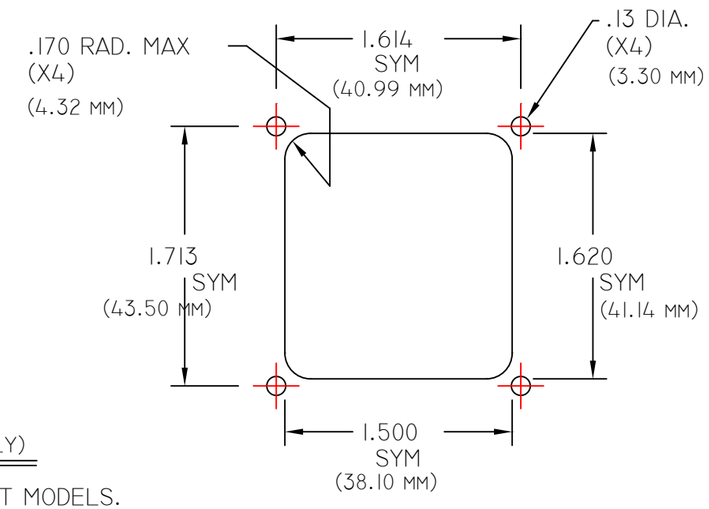

MOUNTING DETAIL

NOTES:

1. ALL KEY SWITCHES HAVE HARD GOLD PLATED CONTACTS, RATED AT 10MM ACTIVATIONS.
2. OUTPUT CONNECTOR HAS GOLD PLATED .025 SQUARE PINS ON 0.1" CENTERS
3. THIS PRODUCT CONTAINS STATIC SENSITIVE COMPONENTS, USE APPROPRIATE PRECAUTIONS WHEN HANDLING.
4. POWER REQUIREMENTS: (PS/2) 35MA TYPICAL AT 5 VOLTS
   BACKLIT MODEL AP2000-BX 55MA MAX AT 5 VOLTS

ORDERING INFORMATION:

A P 2 0 □ □ - [ ] - [ ].[ ]

- P PS/2 INTERFACE (LEGACY)
- U USB INTERFACE
- 0 GRAY ELASTOMER WITH SYN-PROOF™ COATING (LEGACY)
- 4 BLACK ELASTOMER WITH SYN-PROOF™ COATING (STANDARD)
- OPTIONAL CABLE LENGTH DIMENSION.
  MINIMUM LENGTH IS 1.0 FT, MAXIMUM LENGTH IS 9.5 FT. IN 0.5 FOOT INCREMENTS
  BLANK INDICATES, NO CABLE.
- BR BACKLIT RED OPTION
- BG BACKLIT GREEN OPTION

PATENT 7,499,032

CTI ELECTRONICS
WWW.CTIELECTRONICS.COM

NEMA 4 (IP66)
OEM INDUSTRIAL ARROWMOUSE™
(BUTTON STYLE POINTING DEVICE)
AP2000 SERIES

761730	DATE 01-17-18 DRAWN BY PSB
APPROVED	SHEET 1 OF 1

COPYRIGHT 2018 CTI ELECTRONICS
SPECIFICATIONS SUBJECT TO CHANGE WITHOUT NOTICE